Analog to Digital Conversion
Oversampling or Σ-Δ converters

Vassilis Anastassopoulos

Electronics Laboratory, Physics Department,
University of Patras

Outline of the Lecture

Analog to Digital Conversion
- Oversampling or Σ-Δ converters

Sampling Theorem - Quantization of Signals

PCM (Successive Approximation, Flash ADs)

DPCM - DELTA - Σ-Δ Modulation
Principles - Characteristics
1st and 2nd order
Noise shaping - performance

Decimation and A/D converters

Filtering of Σ-Δ sequences

Analog & digital signals

Analog

Continuous function V of *continuous* variable t (time, space etc) : V(t).

Sampled Signal

Digital

Discrete function V_k of *discrete* sampling variable t_k, with k = integer: $V_k = V(t_k)$.

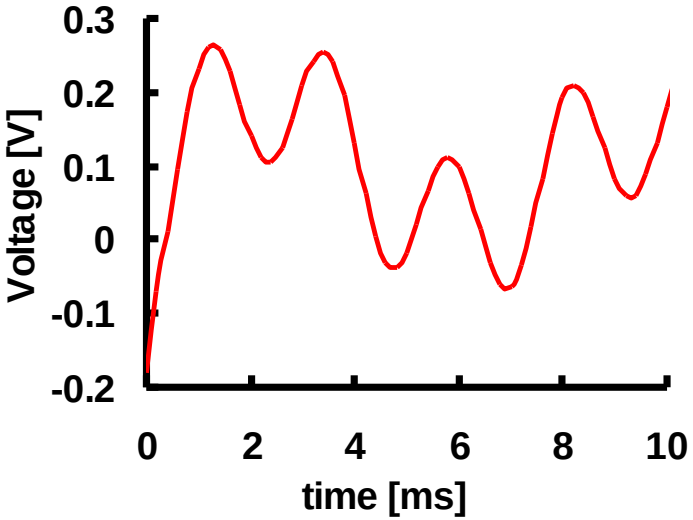

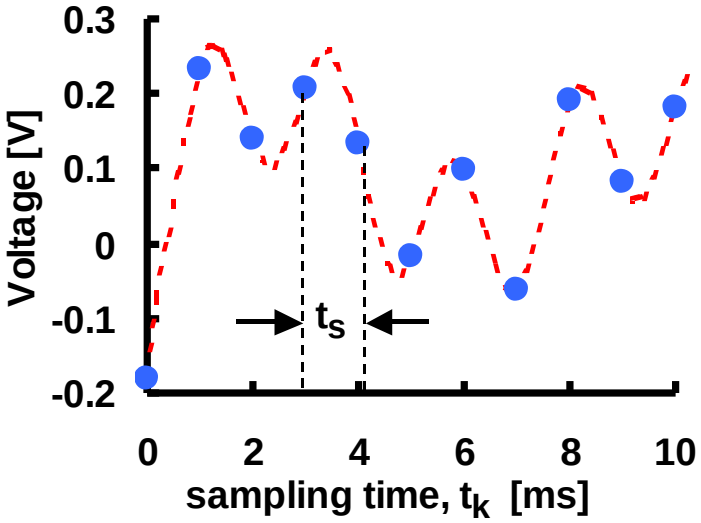

Uniform (periodic) sampling.
Sampling frequency $f_S = 1/ t_S$

AD Conversion - Details

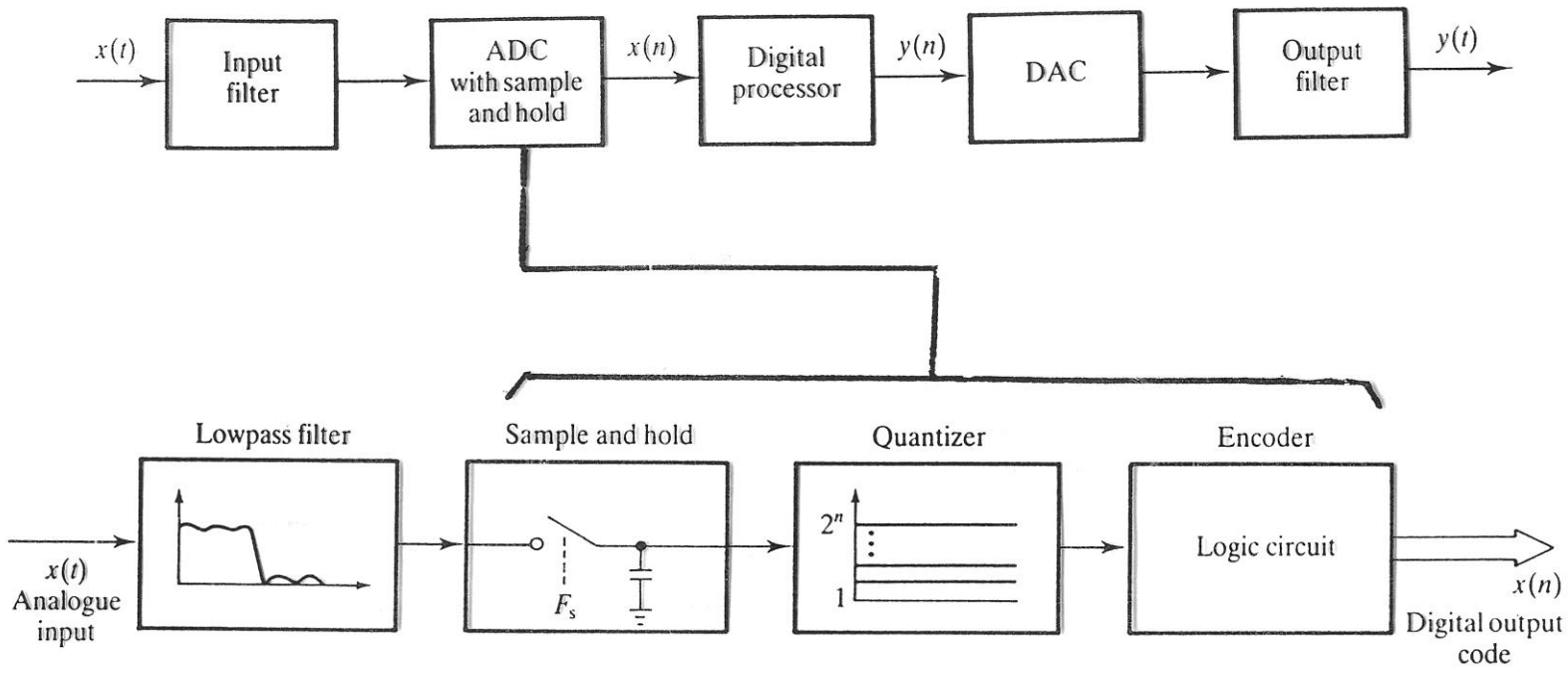

Sampling

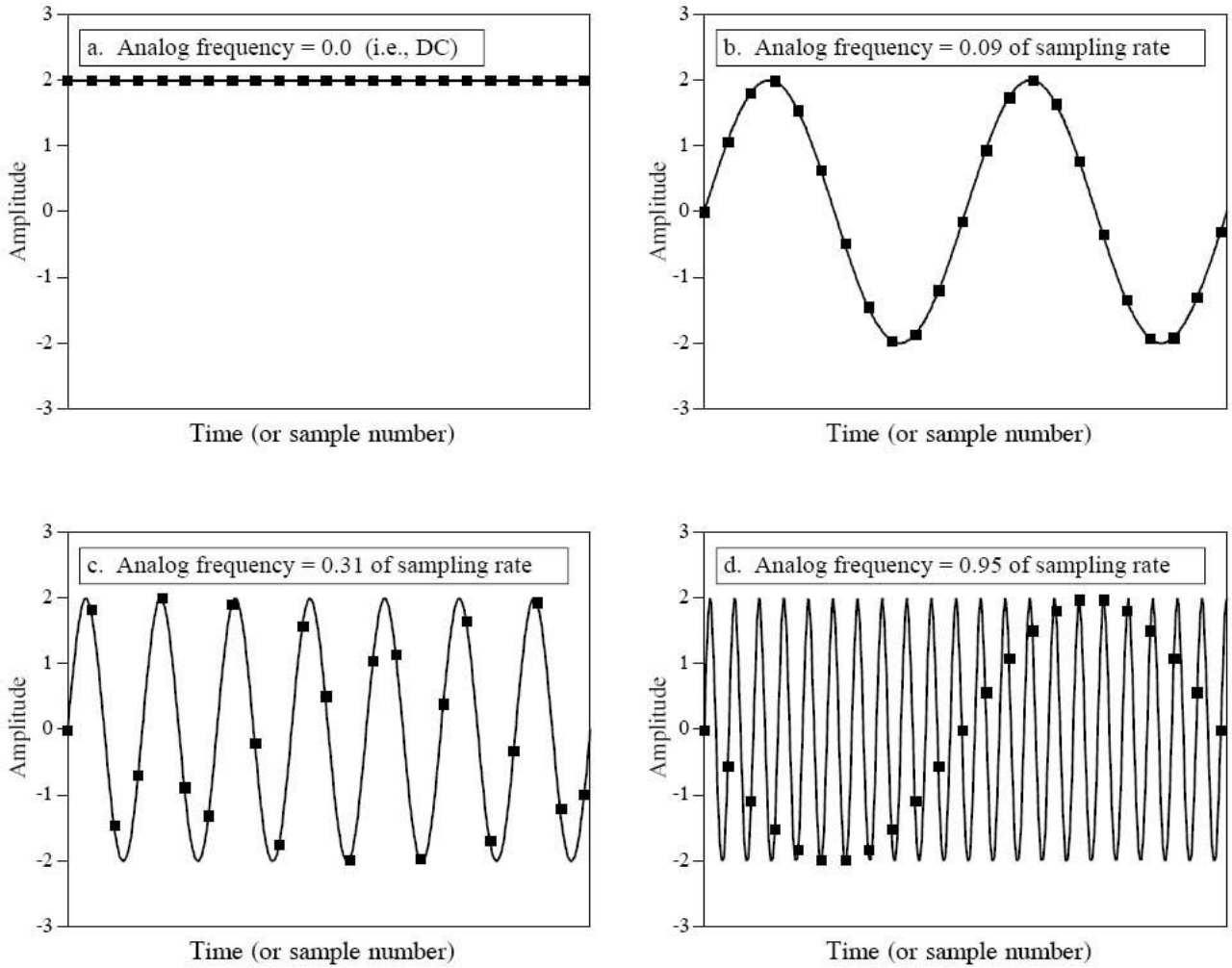
a. Analog frequency = 0.0 (i.e., DC)
b. Analog frequency = 0.09 of sampling rate
c. Analog frequency = 0.31 of sampling rate
d. Analog frequency = 0.95 of sampling rate
Amplitude
Time (or sample number)
3
2
1
0
-1
-2
-3

Rotating Disk

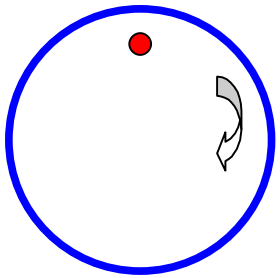

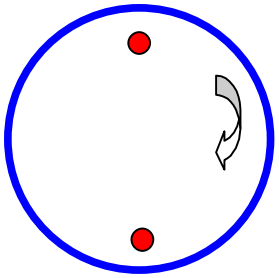

How fast do we have to instantly stare at the disk if it rotates with frequency 0.5 Hz?

1 The sampling theorem

Theo* A signal s(t) with maximum frequency f_{MAX} can be recovered if sampled at frequency $f_S > 2\, f_{MAX}$.

* Multiple proposers: Whittaker(s), Nyquist, Shannon, Kotelnikov.

Naming gets confusing !

Nyquist frequency (rate) $f_N = 2\, f_{MAX}$ *or* f_{MAX} *or* $f_{S,MIN}$ *or* $f_{S,MIN}/2$

Example

$$s(t) = \underbrace{3\cdot\cos(50\pi t)}_{F_1} + \underbrace{10\cdot\sin(300\pi t)}_{F_2} - \underbrace{\cos(100\pi t)}_{F_3}$$

F_1=25 Hz, F_2 = 150 Hz, F_3 = 50 Hz

f_{MAX}

Condition on f_S?

f_S > 300 Hz

Sampling and Spectrum

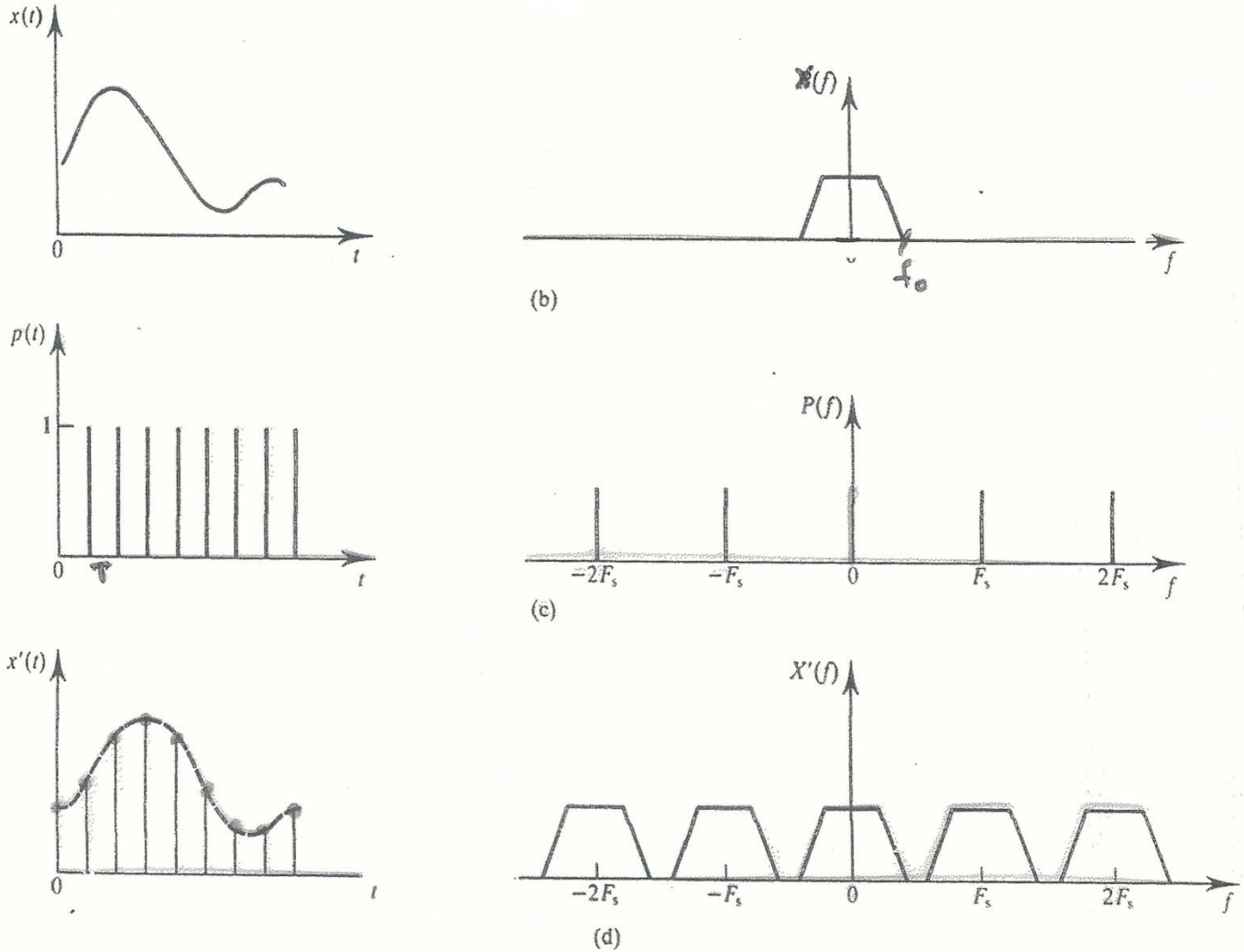

1 Sampling low-pass signals

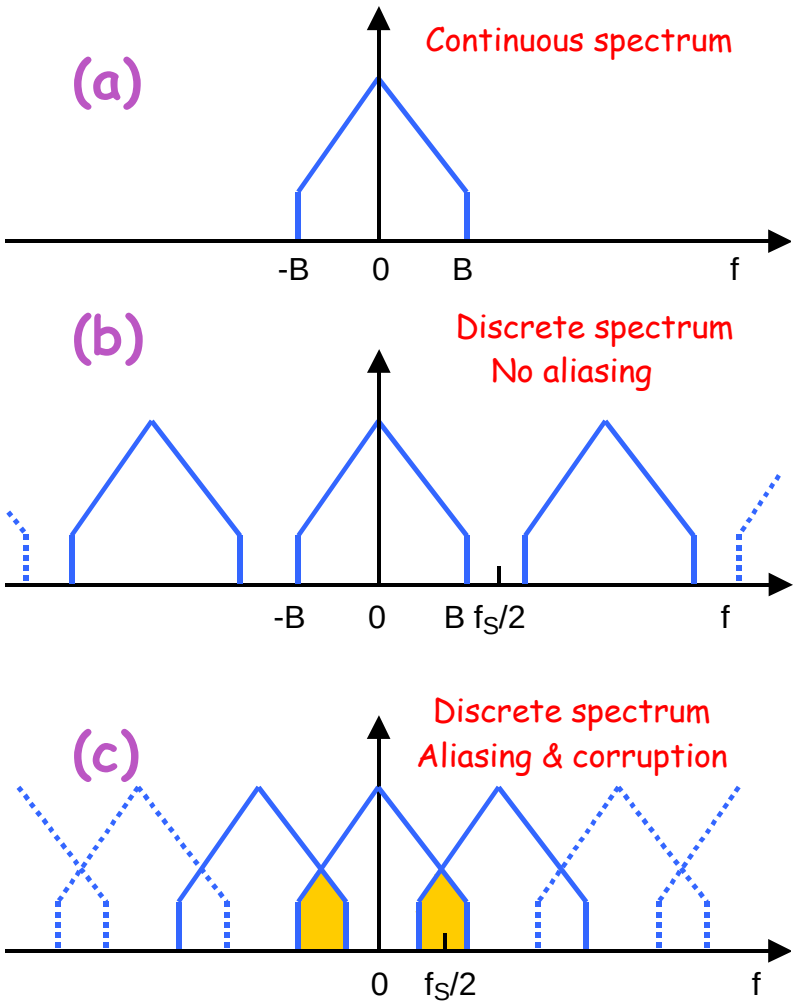

(a) Band-limited signal:
frequencies in [-B, B] (f_{MAX} = B).

(b) Time sampling ➡ frequency repetition.

$f_S > 2\,B$ ➡ no aliasing.

(c) $f_S \leqslant 2\,B$ ➡ aliasing !

Aliasing: signal ambiguity in frequency domain

Quantization and Coding

N Quantization Levels

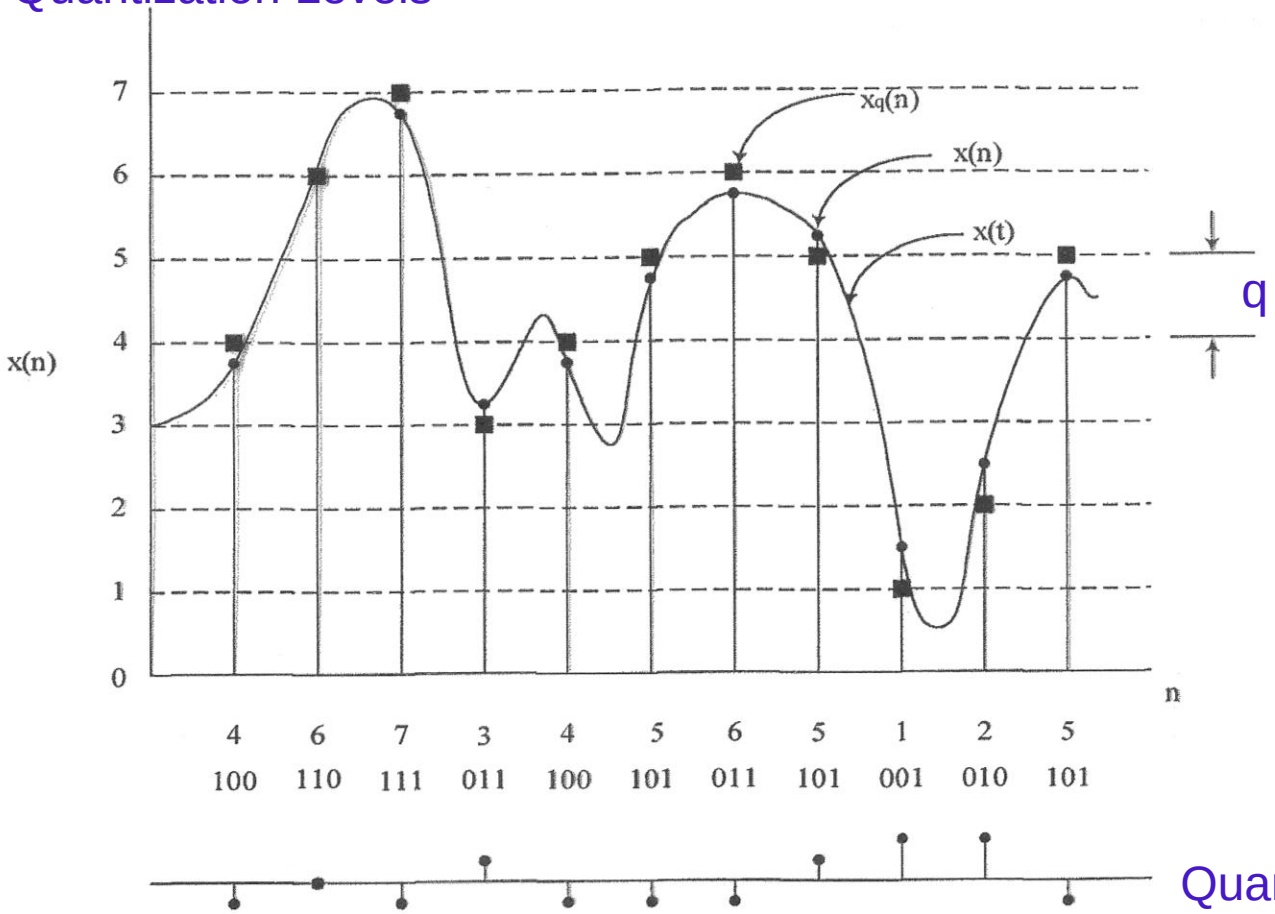

Quantization Noise

2 SNR of ideal ADC

$$\overline{SNR}_{ideal} = 20 \cdot \log_{10}\left(\frac{RMS(input)}{RMS(e_q)}\right) \quad (1)$$

Also called SQNR

(signal-to-quantisation-noise ratio)

Assumptions

- Ideal ADC: only quantisation error e_q (**p(e)** constant, no stuck bits…)
- e_q uncorrelated with signal (noise spectrum???)
- ADC performance constant in time.

$$RMS(input) = \sqrt{\frac{1}{T} \cdot \int_0^T \left(\frac{V_{FSR}}{2} \cdot \sin(\omega t)\right)^2 dt} = \frac{V_{FSR}}{2\sqrt{2}}$$

Input(t) = ½ V_{FSR} sin(ω t).

$$RMS(e_q) = \sqrt{\int_{-q/2}^{q/2} e_q^2 \cdot p(e_q) de_q} = \frac{q}{\sqrt{12}} = \frac{V_{FSR}}{2^N \cdot \sqrt{12}}$$

(sampling frequency $f_S = 2\, f_{MAX}$)

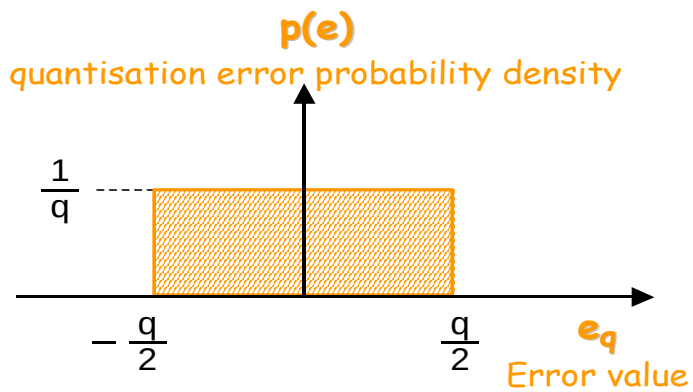

2 SNR of ideal ADC - 2

Substituting in (1) :

$$\overline{SNR}_{ideal} = 6.02 \cdot N + 1.76\,[dB] \quad (2)$$

One additional bit ➡ SNR increased by 6 dB

Real SNR lower because:

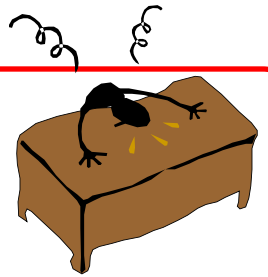

- Real signals have noise.
- Forcing input to full scale unwise.
- Real ADCs have additional noise (aperture jitter, non-linearities etc).

Actually (2) needs correction factor depending on ratio between sampling freq & Nyquist freq. Processing gain due to oversampling.

Coding – Flash AD

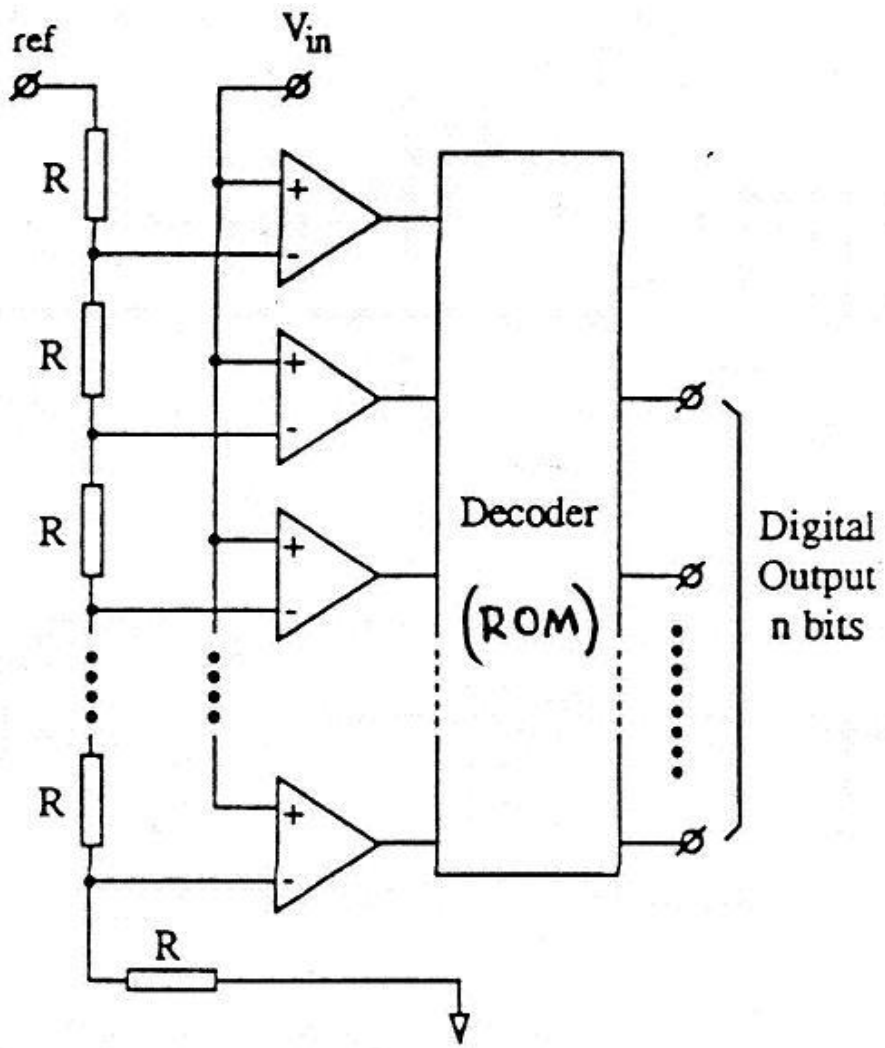

Coding - Conventional

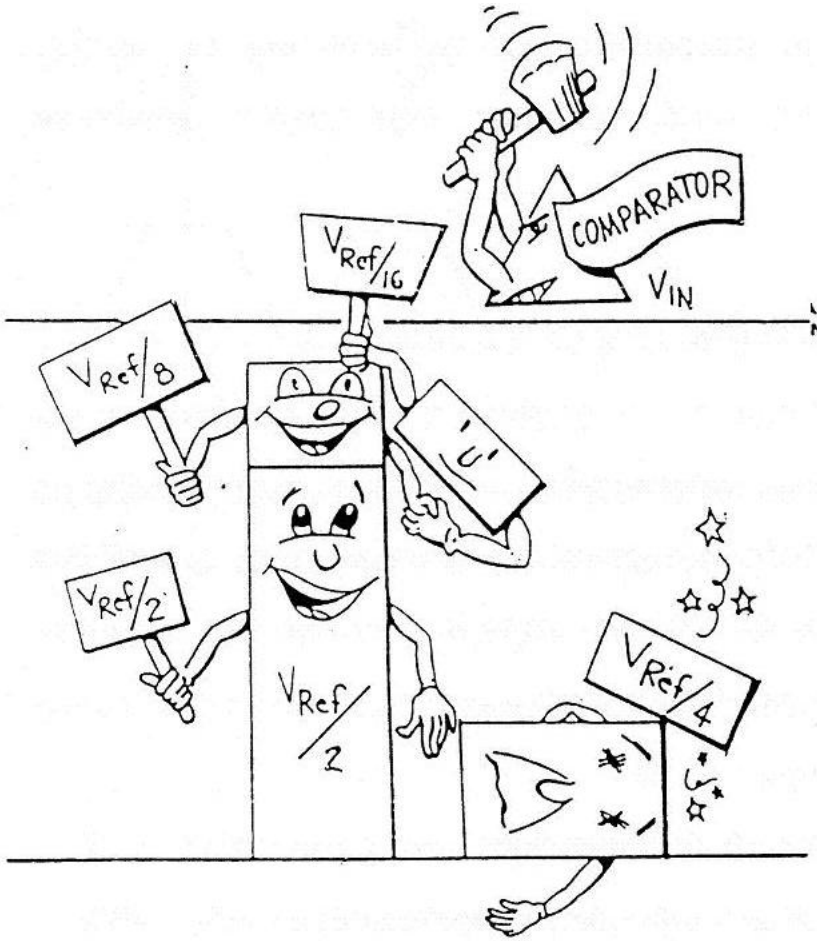

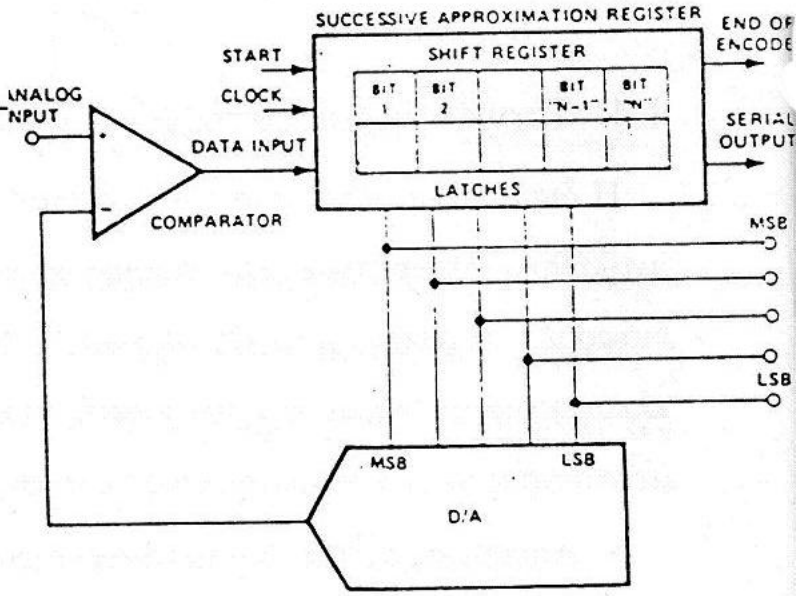

Digital Filters

- They are characterized by their Impulse Response h(n), their Transfer Function H(z) and their Frequency Response H(ω).

- They can have memory, high accuracy and no drift with time and temperature.

- They can possess linear phase.

- They can be implemented by digital computers.

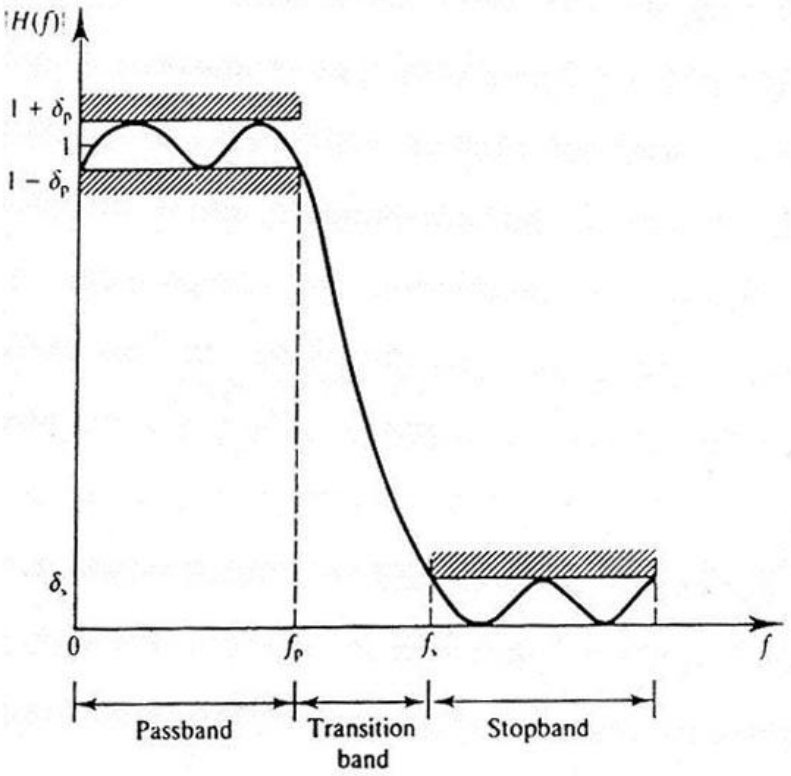

Digital Filters - Categories

IIR

$$y(n)=\sum_{k=0}^{N}a(k)x(n-k)-\sum_{k=1}^{M}b_k y(n-k)$$

$$H(z)=\frac{\sum_{k=0}^{N}a_k z^{-k}}{1+\sum_{k=1}^{M}b_k z^{-k}}$$

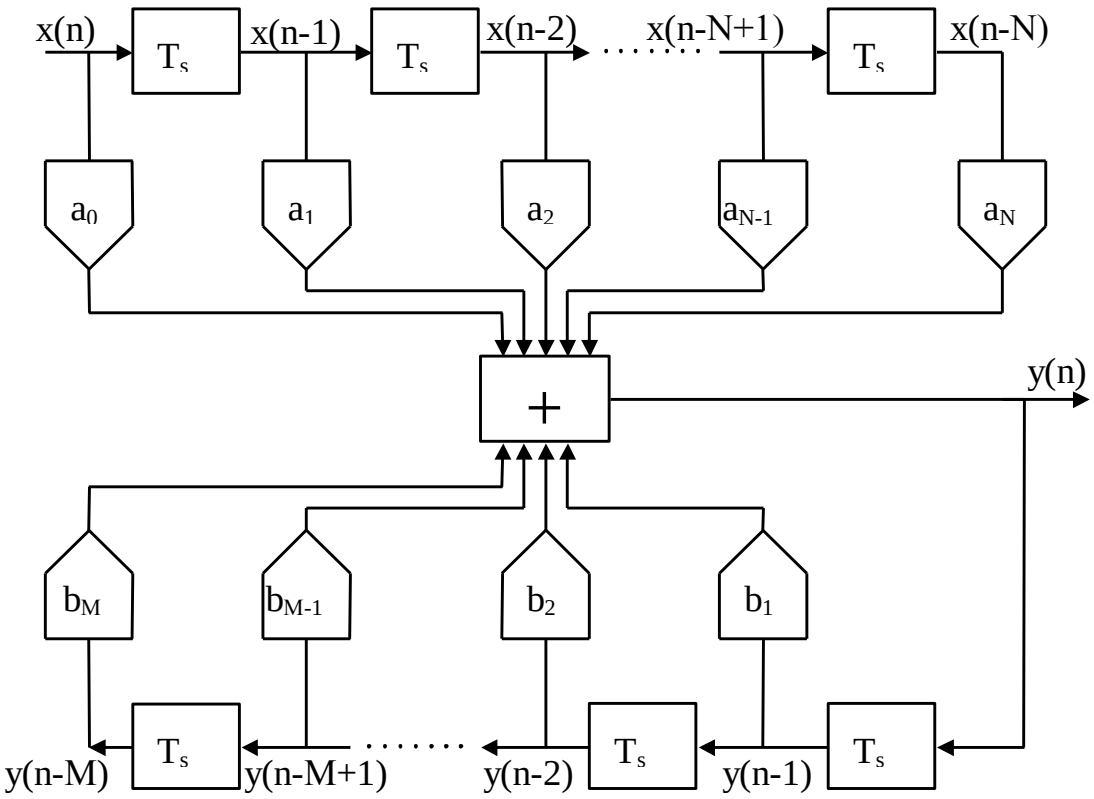

Digital Filters - Categories

FIR

$$y(n)=\sum_{k=0}^{N}h(k)x(n-k)=\sum_{k=0}^{N}a(k)x(n-k)$$

$$H(z)=\sum_{k=0}^{N}a_k z^{-k}=\sum_{k=0}^{N}h(k)z^{-k}$$

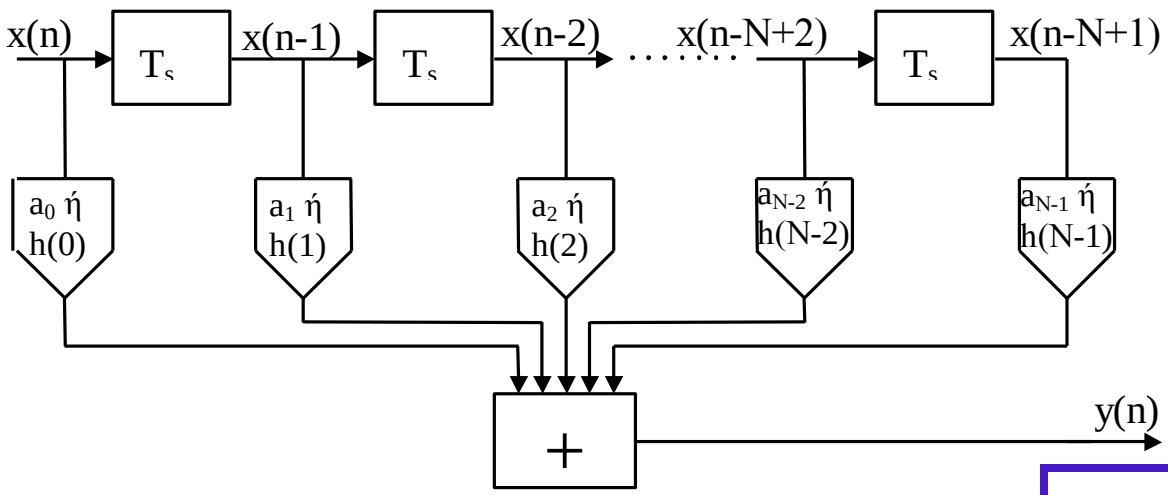

- Stable
- Linear phase

Digital Filters - Examples

$$H(z) = \frac{a_0 + a_1 z^{-1} + a_2 z^{-2}}{1 + b_1 z^{-1} + b_2 z^{-2}}$$

a_0=0.498, a_1=0.927,
a_2=0.498, b_1=-0.674
b_2=-0.363.

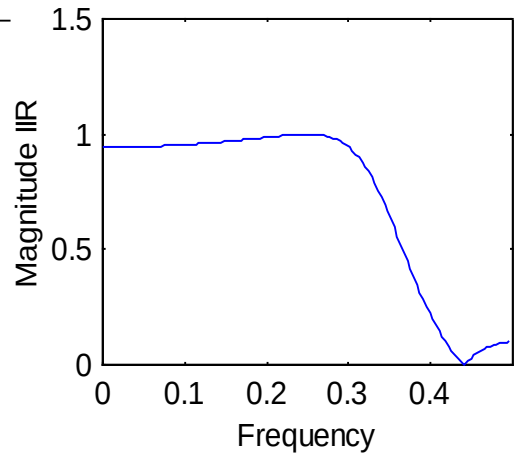

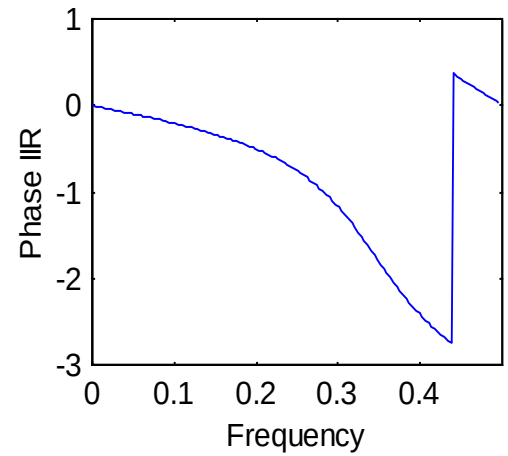

$$H(z) = \sum_{k=0}^{11} h(k) z^{-k}$$

h(1)=h(10)=-0.04506

h(2)=h(9)=0.06916

h(3)=h(8)=-0.0553

h(4)=h(7)=-.06342

h(5)=h(4)=0.5789

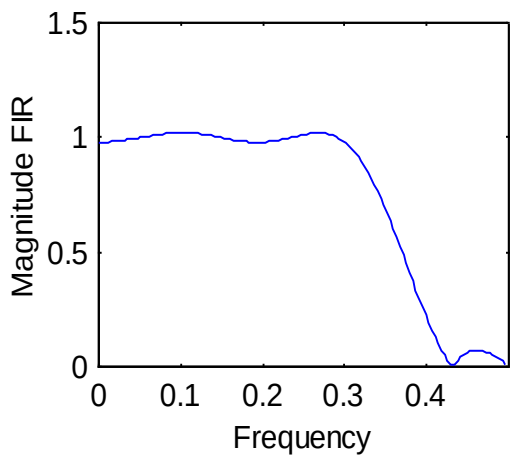

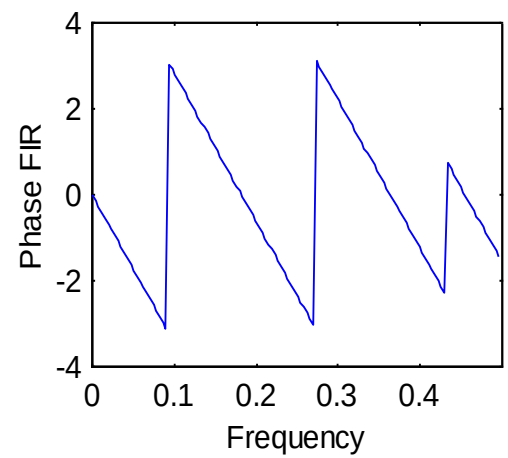

FIR filters

$$y(n)=\sum_{k=0}^{N}h(k)x(n-k)=\sum_{k=0}^{N}a(k)x(n-k)$$

$$H(z)=\sum_{k=0}^{N}a_k z^{-k}=\sum_{k=0}^{N}h(k)z^{-k}$$

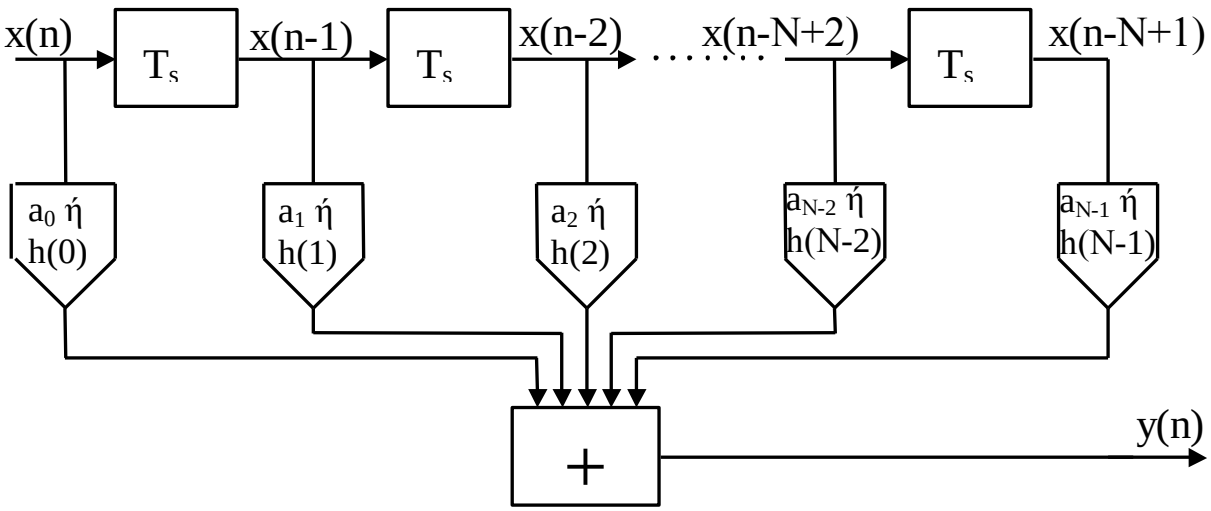

- Stable
- Linear phase

Design Methods
- Optimal filters
- Windows method
- Sampling frequency

Linear phase - Same time delay

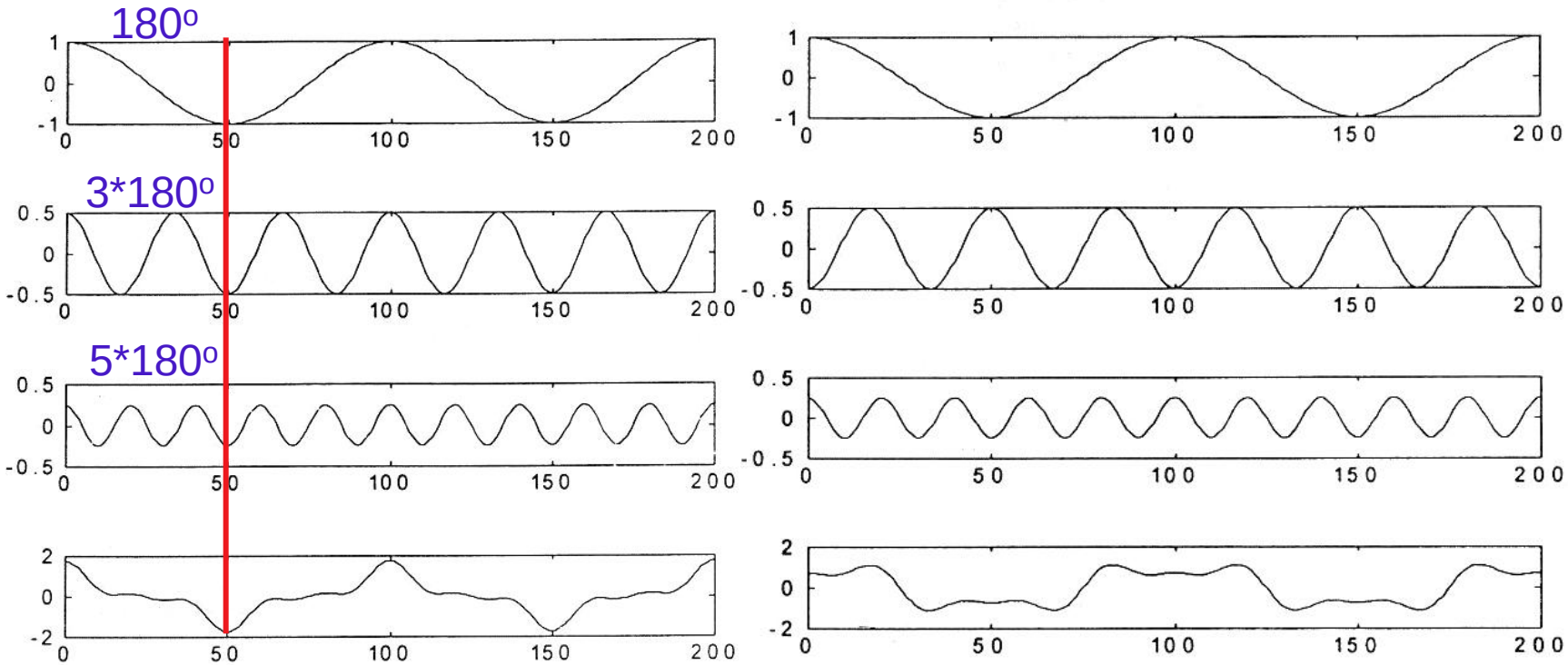

If you shift in time one signal, then you have to shift the other signals the same amount of time in order the final wave remains unchanged.

For faster signals the same time interval means larger phase difference.

Proportional to the frequency of the signals. -αω

Oversampling and Noise Shaping Converters

- Since the increase in sampling rate results only in spreading the power of the quantization noise over a wider bandwidth, <u>we gain only half a bit every doubling of the frequency</u>.

$$SNR_1 = \frac{N_S}{N_Q} \qquad SNR_2 = \frac{N_S}{N_Q/2}$$

$$\text{or} \quad SNR_2 = SNR_1 + \underbrace{3\,dBs}_{1/2\ \text{bit}}$$

- Better efficiency is obtained when the in-band noise is reduced regardless of the out-of-band noise.

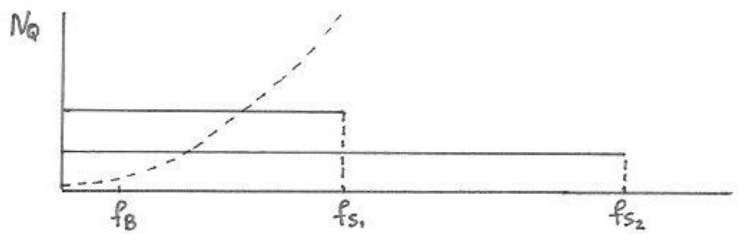

Quantization Noise Shaping

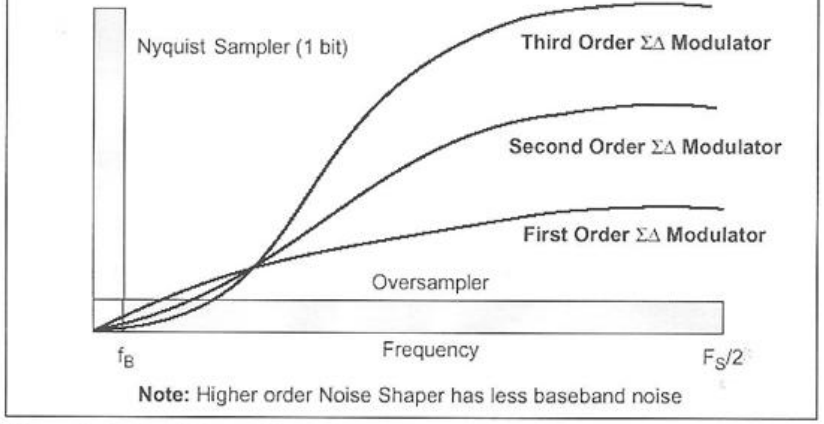

Figure 6-9 Multi-Order Sigma-Delta Noise Shapers

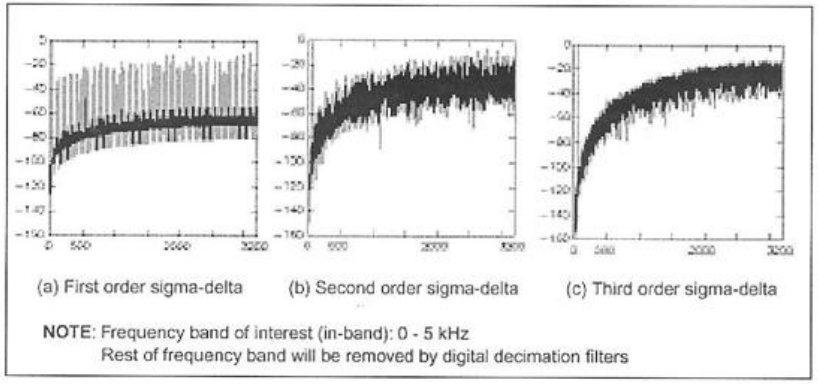

Figure 6-10 Spectra of Three Sigma-Delta Noise Shapers

Differential Pulse Code Modulation - DPCM

- It is actually a PCM technique in which the difference between the consecutive samples is coded.
- It has larger dynamic range but it is more sensitive to noise.

Delta Modulation - DM

☞ It is a one-bit DPCM

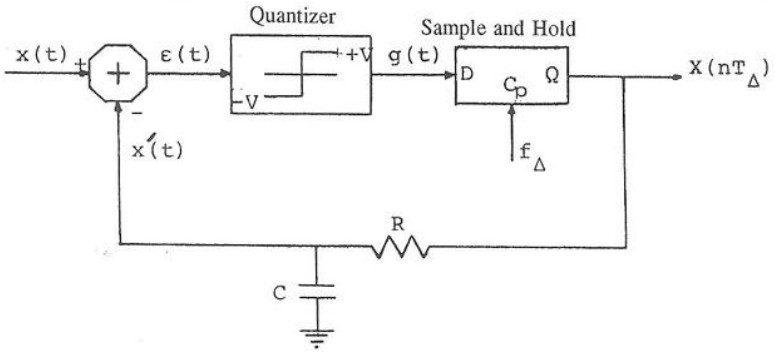

- The appearance of the +1 and -1 are related to the slope of the signal.
- High sampling frequency is required.
- The corresponding circuits are relative simple.
- It is preferred in noisy environment.

Delta Modulation – One bit DPCM

The simplest form is the exponential Delta Modulation

(An RC circuit as integrator in the feedback loop).

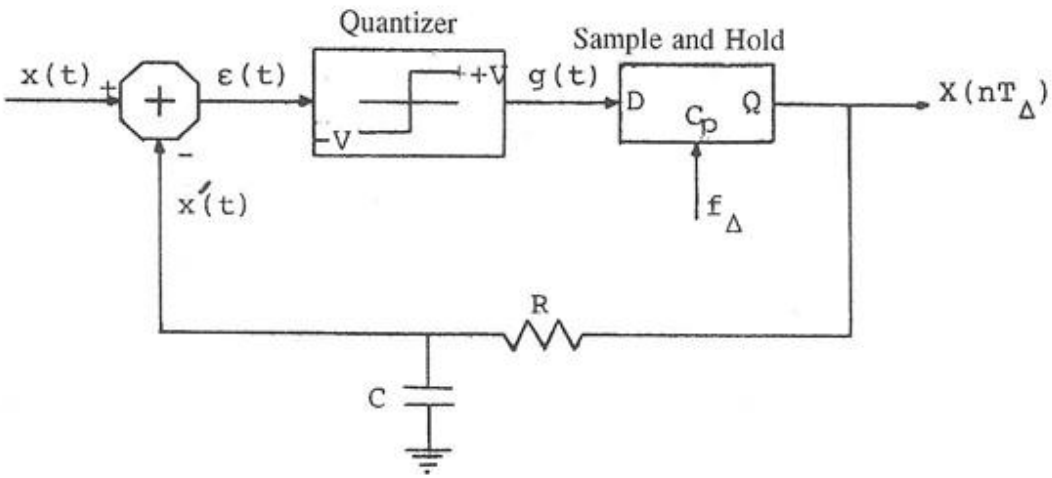

The coder is an integrator as the one in the feedback loop.

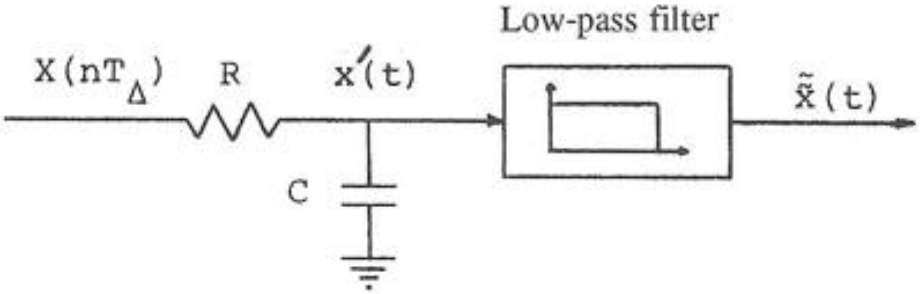

Delta Sequences

- The simplest delta encoder

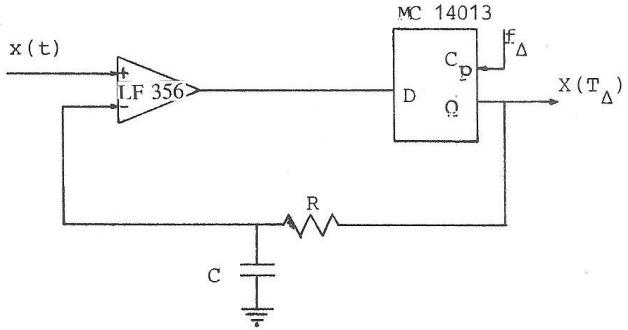

- The Appearance of positive and negative pulses is related to the slope of the signal.

- Constant value signal results to the Idling pattern I_n (alternative positive and negative pulses).

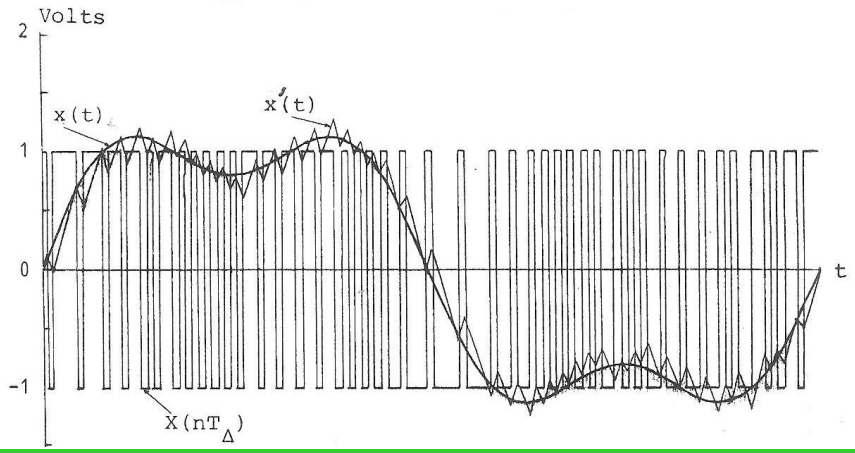

ΔΣ - Encoder

This encoder is used in order to avoid overload.

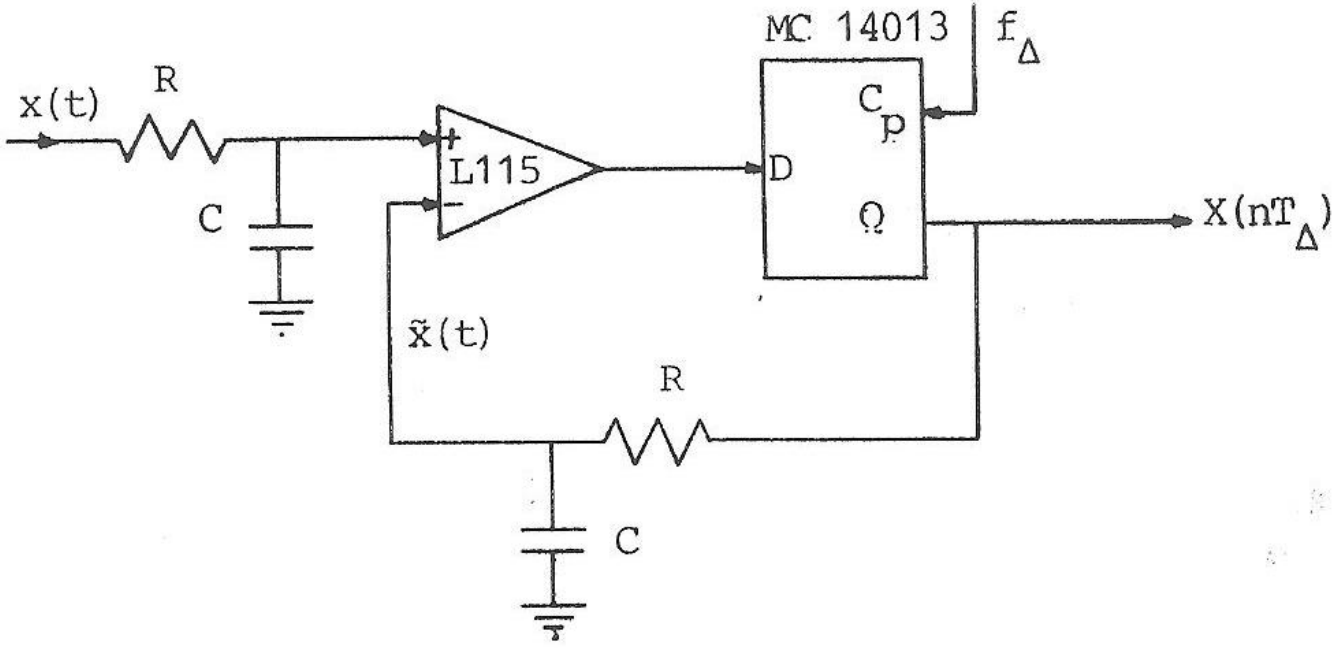

ΔΣ – Encoder Behavior - Signal Transfer Function

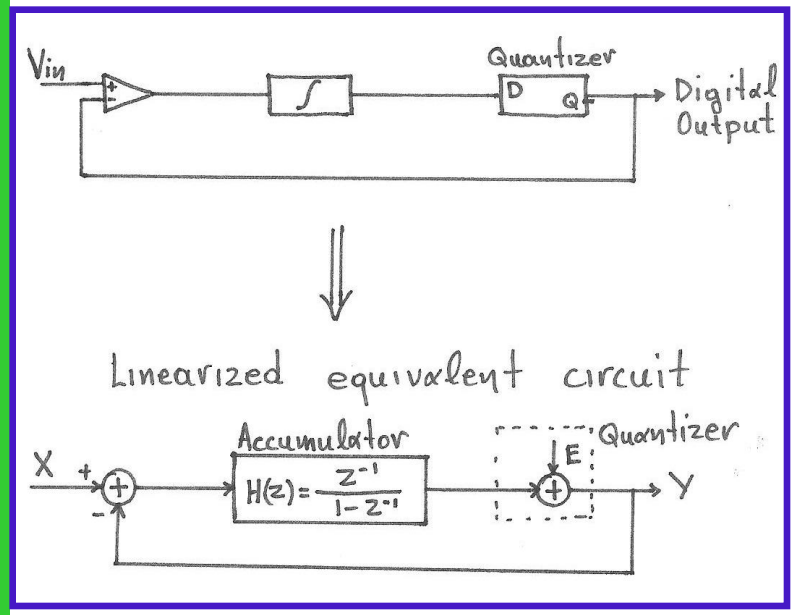

Accumulator

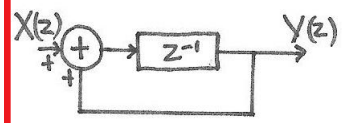

$$Y(z) = X(z)\cdot z^{-1} + Y(z)\, z^{-1}$$

$$H(z) = \frac{Y(z)}{X(z)} = \frac{z^{-1}}{1-z^{-1}}$$

Signal transfer function $(E=0)$

$$Y(z) = X(z)\cdot\frac{z^{-1}}{1-z^{-1}} - Y(z)\frac{z^{-1}}{1-z^{-1}} \Rightarrow$$

$$\Rightarrow Y(z)\left[1+\frac{z^{-1}}{1-z^{-1}}\right] = X(z)\frac{z^{-1}}{1-z^{-1}} \Rightarrow$$

$$\Rightarrow S(z) = \frac{Y(z)}{X(z)} = z^{-1} = e^{-j\omega T} \qquad |S(z)| = 1$$

ΔΣ – Encoder Behavior
Quantization Noise Signal Transfer Function (X=0)

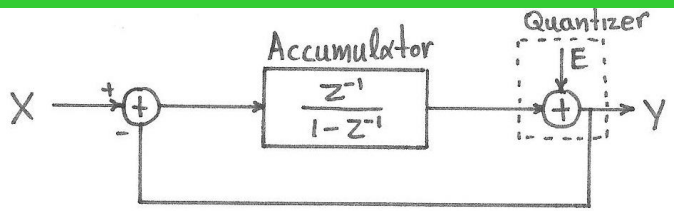

$$Y(z) = E(z) - Y(z)\,\frac{z^{-1}}{1-z^{-1}}$$

$$N(z) = \frac{Y(z)}{E(z)} = (1-z^{-1})$$ High-pass filter

i.e.

$$|N(z)| = \sqrt{(1-\cos\omega T_s)^2 + \sin^2\omega T_s}$$

$$= \sqrt{2 - 2\cos\omega T_s}$$

$$= \sqrt{2 - 2\left(1 - 2\sin^2\frac{\omega T_s}{2}\right)} = \left|2\sin\omega\frac{T_s}{2}\right|$$

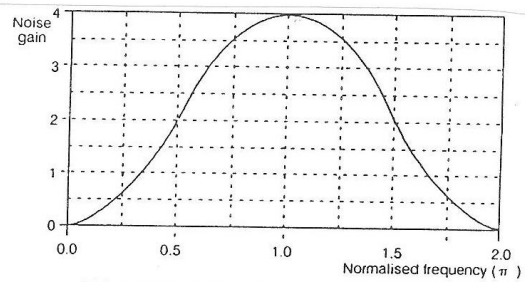

Noise shaping transer function of a first order modulator

Quantization Noise Power Density in the Signal Band

- Original noise power density: $S_Q = \frac{\Delta^2}{12} \cdot \frac{1}{f_s}$

  → flat over the range $[-f_s/2, f_s/2]$

- Modified noise power density:

$$S_N = \frac{\Delta^2}{12} \cdot \frac{1}{f_s} \left(2 \sin \frac{\omega T_s}{2}\right)^2$$

  → for the region $[-f_B, f_B]$ where $f_B \ll f_s$

$$\sin \frac{\omega T_s}{2} \sim \frac{\omega T_s}{2}$$

- Total Noise power in the signal band:

$$N_B = \int_{-f_B}^{f_B} \frac{\Delta^2}{12} \frac{1}{f_s} (\omega T_s)^2 \, df$$

$$= \frac{\Delta^2}{12} \frac{4\pi^2}{f_s^3} \int_{-f_B}^{f_B} f^2 \, df$$

$$= K \cdot \frac{1}{f_s^3}$$

- Doubling the sampling rate we gain 9 dBs or $1\frac{1}{2}$ bit resolution.
- We have to take care for th out-of-band Noise.

A Second Order ΔΣ Modulator

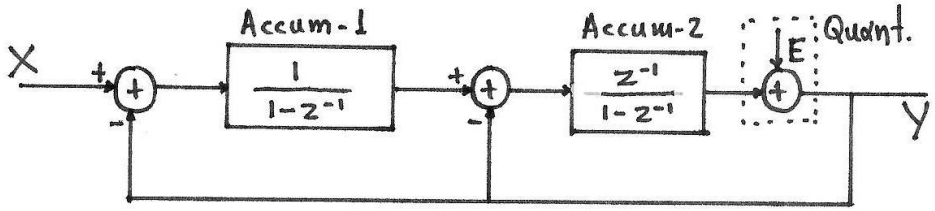

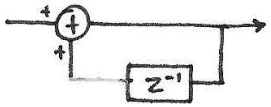

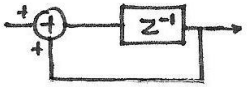

- In a similar way we find

$$Y(z) = z^{-1} X(z) + (1-z^{-1})^2 E$$

- Total noise power

$$N_B = K \cdot \frac{1}{f_s^5}$$

→ Doubling the frequency we gain 15 dBs or $2\frac{1}{2}$ bits resolution

Third Order Noise Shaper

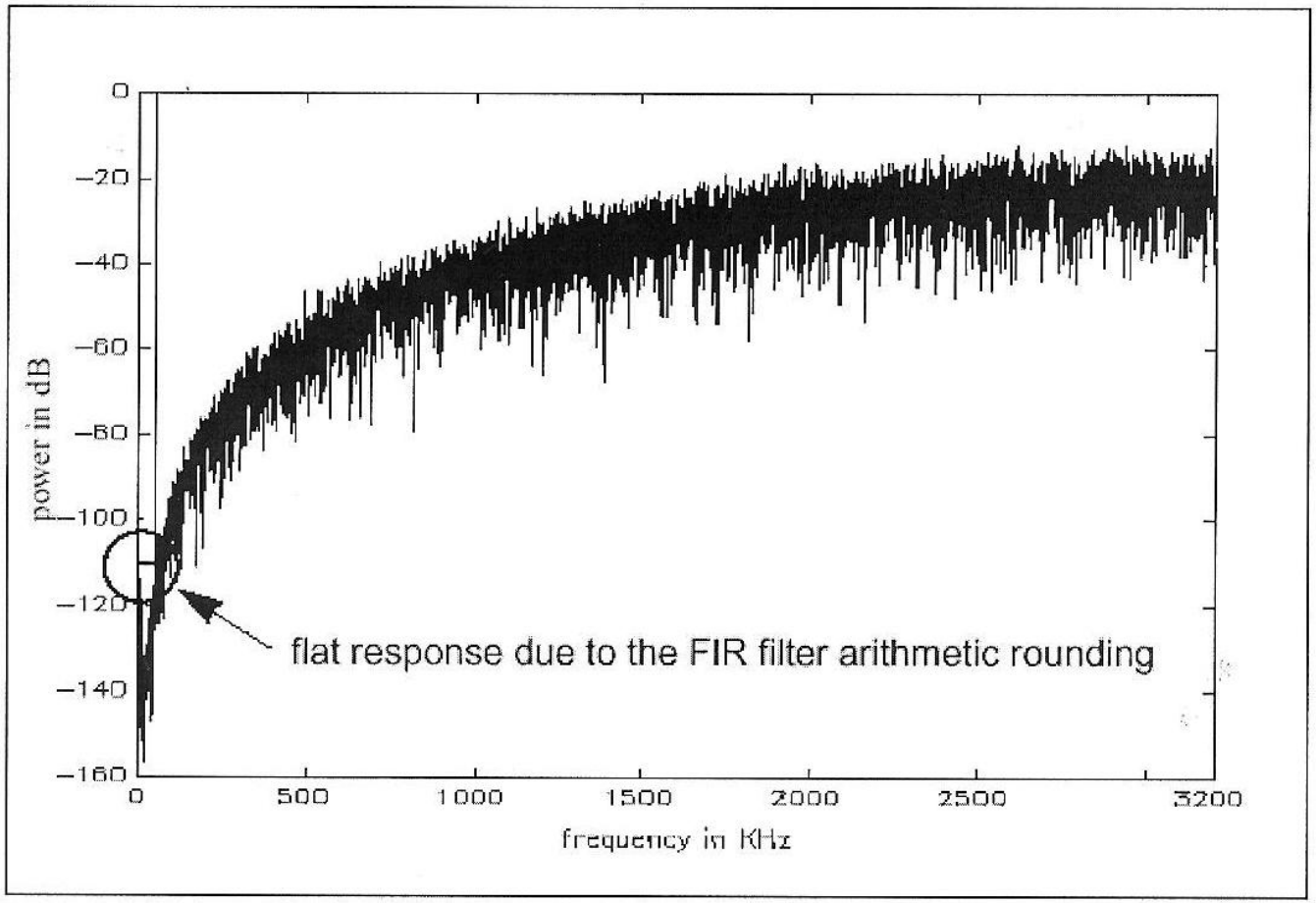

Figure 8-1 Spectrum of a Third-Order Noise Shaper (16384 FFT bins)

Digital Decimation

- The out-of-band noise has been amplified.

So

→ We have to reduce the sampling rate at a value two times the signal frequency.

but

→ we have first to eliminate the out-of-band noise to avoid aliazing using low-pass filter(s) with many zeros (FIR filters)

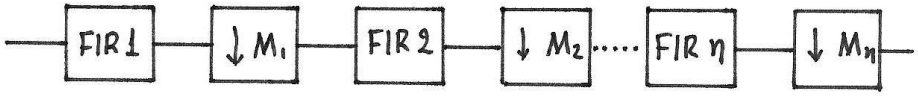

Architecture of a typical digital decimator.

- Comb filters are preferable

$$D(z) = \frac{1}{N}\left[\frac{1-z^{-N}}{1-z^{-1}}\right]^{K}$$

Digital Decimation – ΣΔ to PCM Conversion

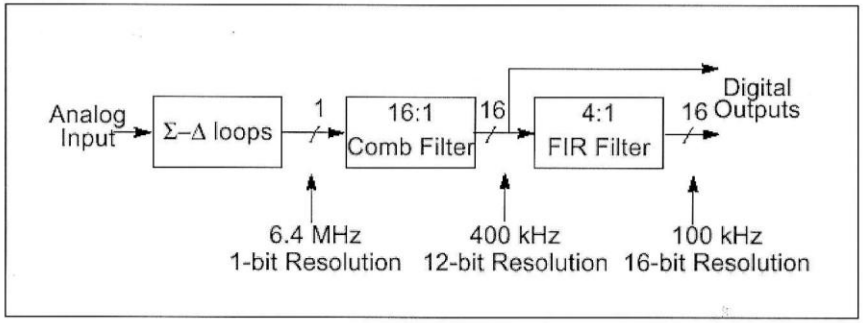

Figure 7-1 Digital Decimation Process

$$y(n) = \sum_{i=0}^{15} x(n-i)$$: **Moving Average Process**

$$Y(z) = \frac{1-z^{-16}}{1-z^{-1}} X(z)$$

No Multiplications
No Coefficient Storage
Linear Phase

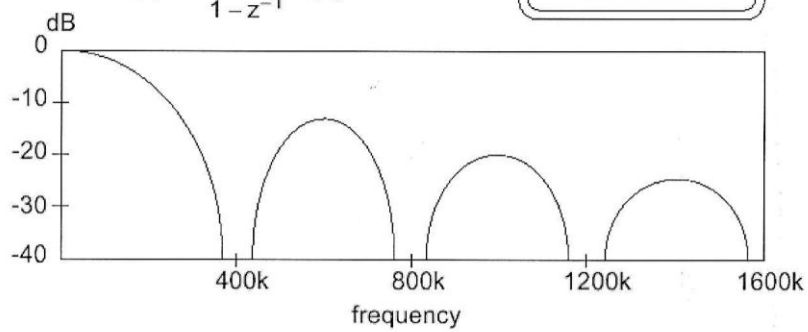

Figure 7-3 Transfer Function of a Comb-Filter

Digital Decimation – ΣΔ to PCM Conversion

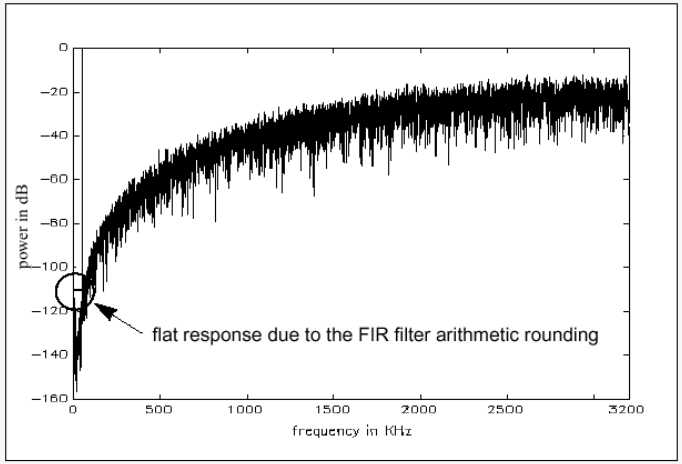

Figure 8-1 Spectrum of a Third-Order Noise Shaper (16384 FFT bins)

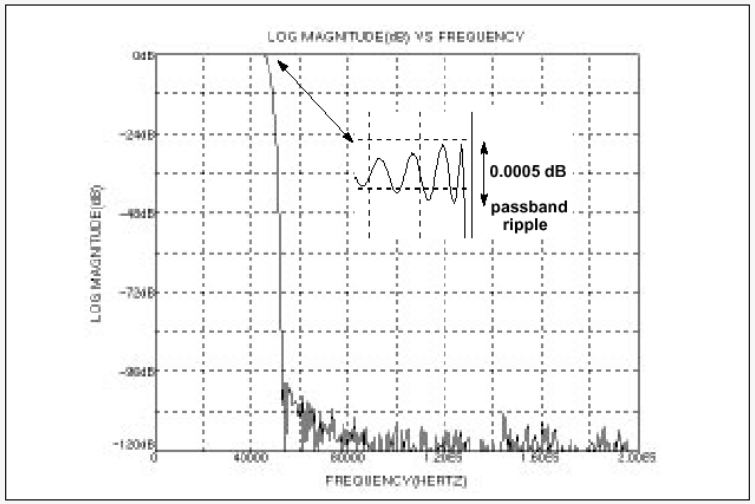

Figure 7-7 FIR Filter Magnitude Response

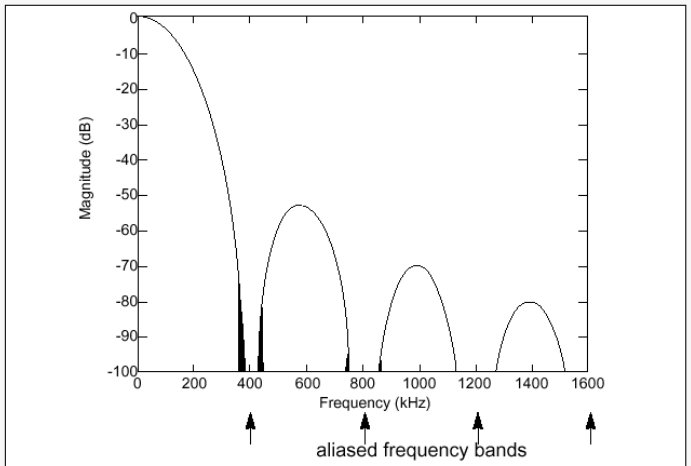

: 4-Stage Comb + FIR Filter

Figure 7-8 Aliased Noise Bands of FIR Filter Output

Multi-Rate FIR filters

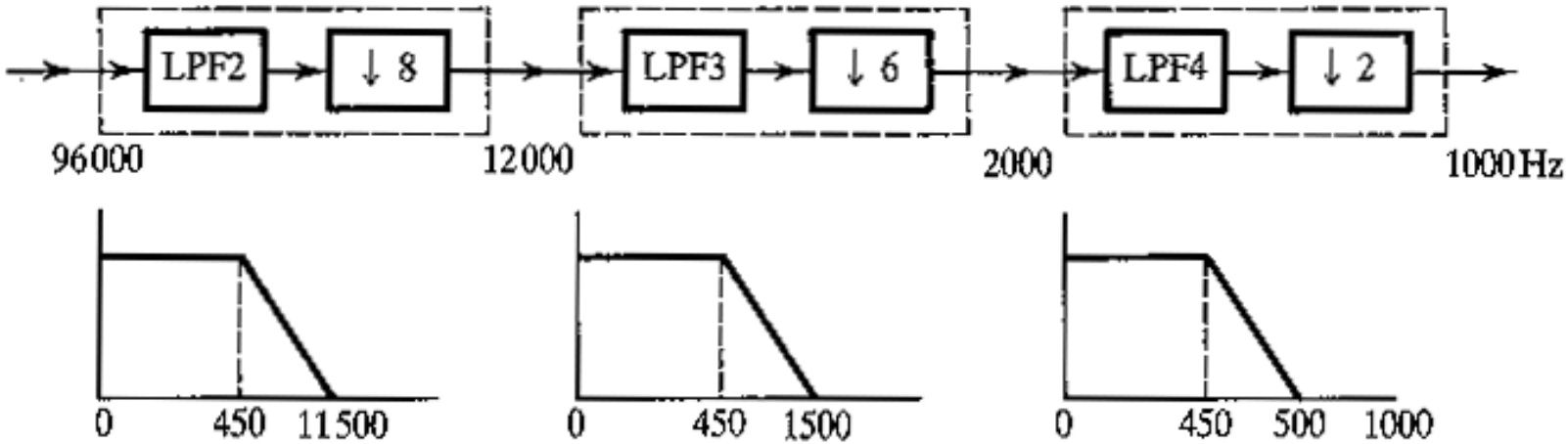

$\Delta f_1 = 0.1150$
$\delta_{p1} = 0.0033$
$\delta_{s1} = 0.001$
$N_1 = 25$

$\Delta f_2 = 0.0875$
$\delta_{p2} = 0.0033$
$\delta_{s2} = 0.001$
$N_2 = 34$

$\Delta f_3 = 0.025$
$\delta_{p3} = 0.0033$
$\delta_{s3} = 0.001,$
$N_3 = 117$

Decimation

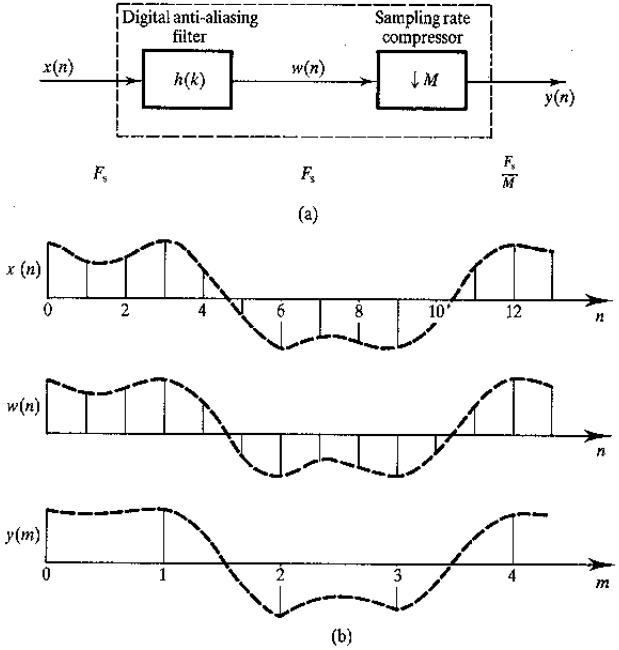

Figure 8.1 (a) Block diagram of decimation by a factor of M. (b) An illustration of decimation by a factor of $M = 3$. Note that only one out of every three samples of $w(n)$ appears at the output.

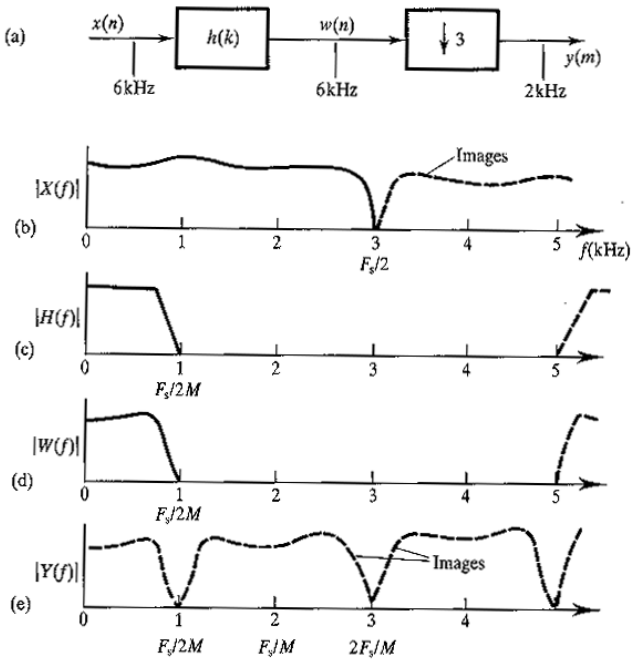

Figure 8.2 Spectral interpretation of decimation of a signal; from 6 kHz to 2 kHz. The image components would have aliased into the signal but for the digital filter.

Low rate sequences are finally stored on CDs

Interpolation

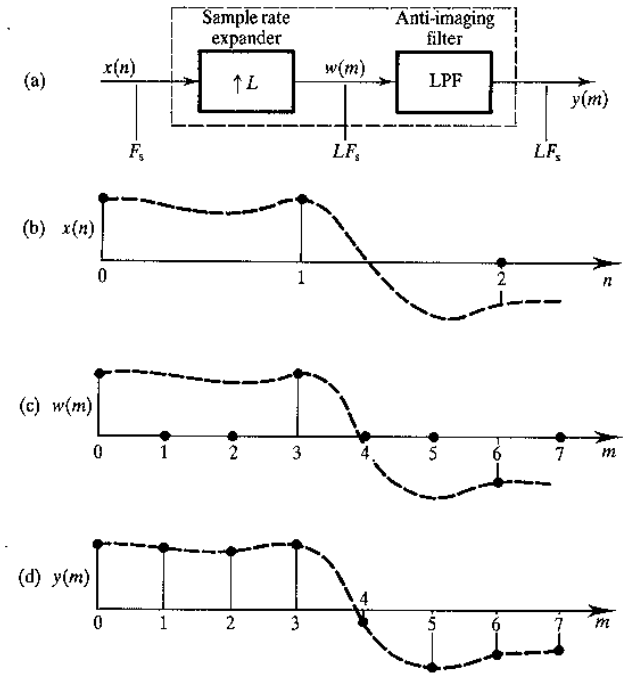

Figure 8.3 Time domain illustration of interpolation by a factor of $L = 3$. Note that f each sample of $x(n)$, three output samples $y(m)$ are obtained.

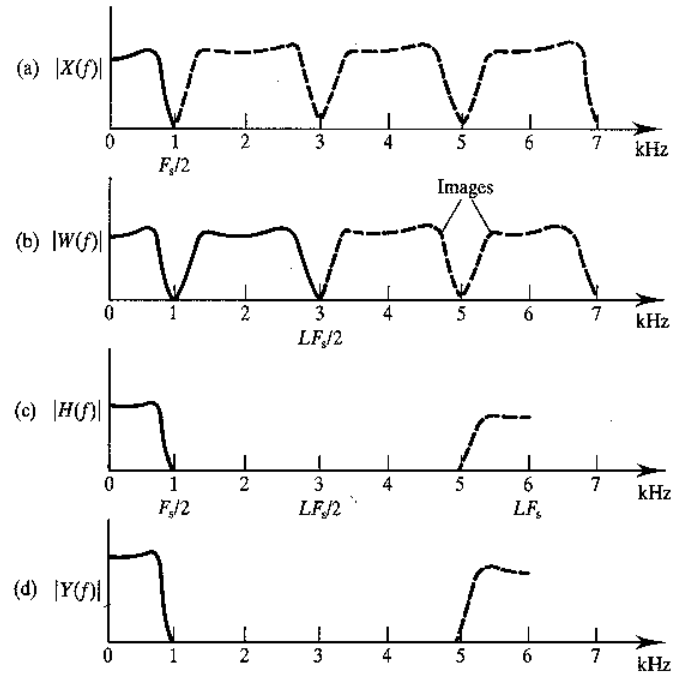

Figure 8.4 Spectral interpretation of interpolation of a signal from 2 kHz to 6 kHz.

Interpolation is used to convert the Low rate sequences stored on the CDs to analog signals

Oversampling is used

Oversampling in Audio Systems

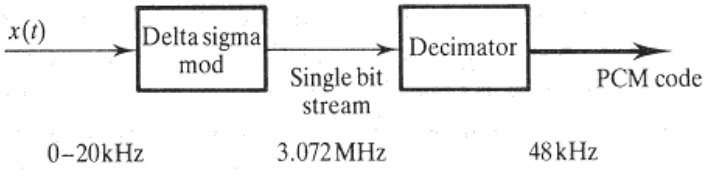

Figure 8.18 Simplified block diagram of single-bit ADC scheme.

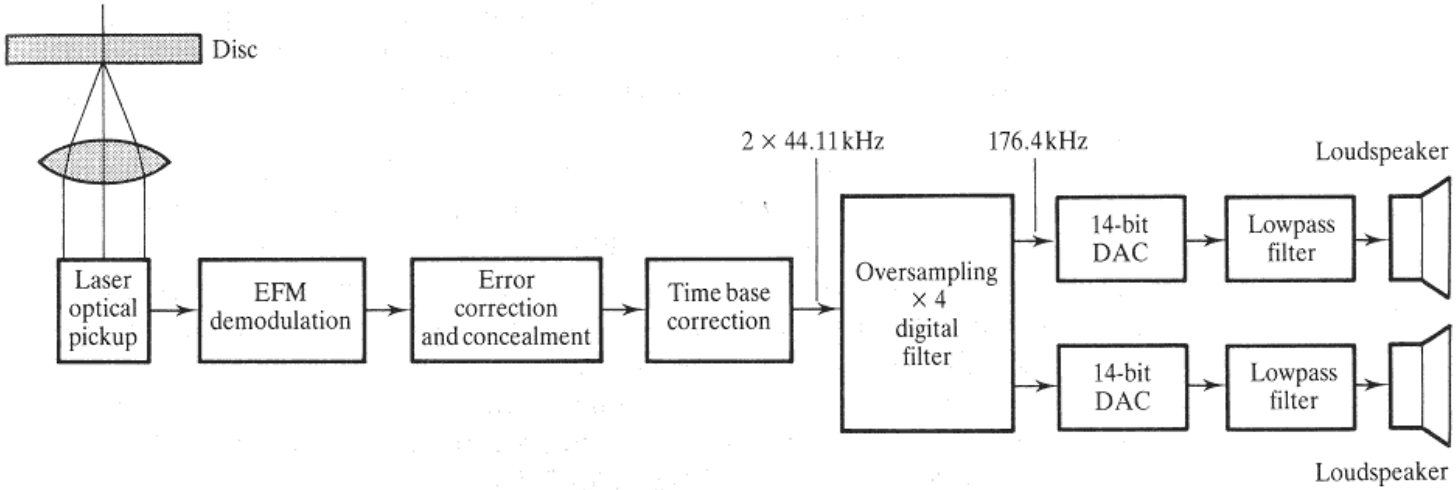

Figure 8.19 Audio signal reproduction in the compact disc system.